21. November 2019

DALLMER

yard drain type 615.1, DN 100

Product No. **861467**
EAN: 4001636861467
Discount group: 3

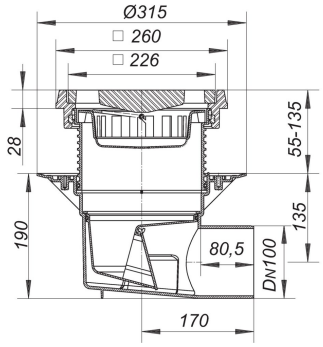

outlet DN 100 horizontal

specification:
- flange
- frost-proof self-closing flap-valve
- removable bucket
- height adjustable and rotatable grating

material:
polypropylene

ductile iron grate and frame, secured, load class B (up to 12,5 t)

Flow rate tested to DIN EN 1253 Tab. 3,
(with 35 mm water over cover plate), conforming to DIN EN 274

	Norm	DALLMER
DN 100	0.4 l/s	4.2 l/s

Product No.	Description	Dimensions
860996	ductile iron grate for 605/606/615/616	

Dallmer GmbH + Co KG · Wiebelsheidestraße 25 · 59757 Arnsberg / Germany · Tel.: +49 2932 9616-0 · Fax: +49 2932 9616-222
www.dallmer.de · info@dallmer.de

Subject to modifications due to technical development, errors and misprints.

21. November 2019

DALLMER

Product No.	Description	Dimensions
864918	bucket for 605, 606, 615 and 616	
864956	clamp ring DG 15	
860996	ductile iron grate for 605/606/615/616	
860989	ductile iron grate with screws for 605.1/606.1/615.1/616.1	
910684	frame extension type 620	
860507	frame type 608.0	
860606	frame type 608.1	
864925	perforated collar/gravel guard	
861504	raising piece type 618	
862501	raising piece type 618 DallBit	

Dallmer GmbH + Co KG · Wiebelsheidestraße 25 · 59757 Arnsberg / Germany · Tel.: +49 2932 9616-0 · Fax: +49 2932 9616-222
www.dallmer.de · info@dallmer.de

Subject to modifications due to technical development, errors and misprints.